SYPRIS®
TECHNOLOGIES
Tube Turns Products

2612 Howard Street
Louisville, Ky. 40211
Telephone (502)-774-6011

Instructions for Replacing Cam Handles on T-Bolt Closures

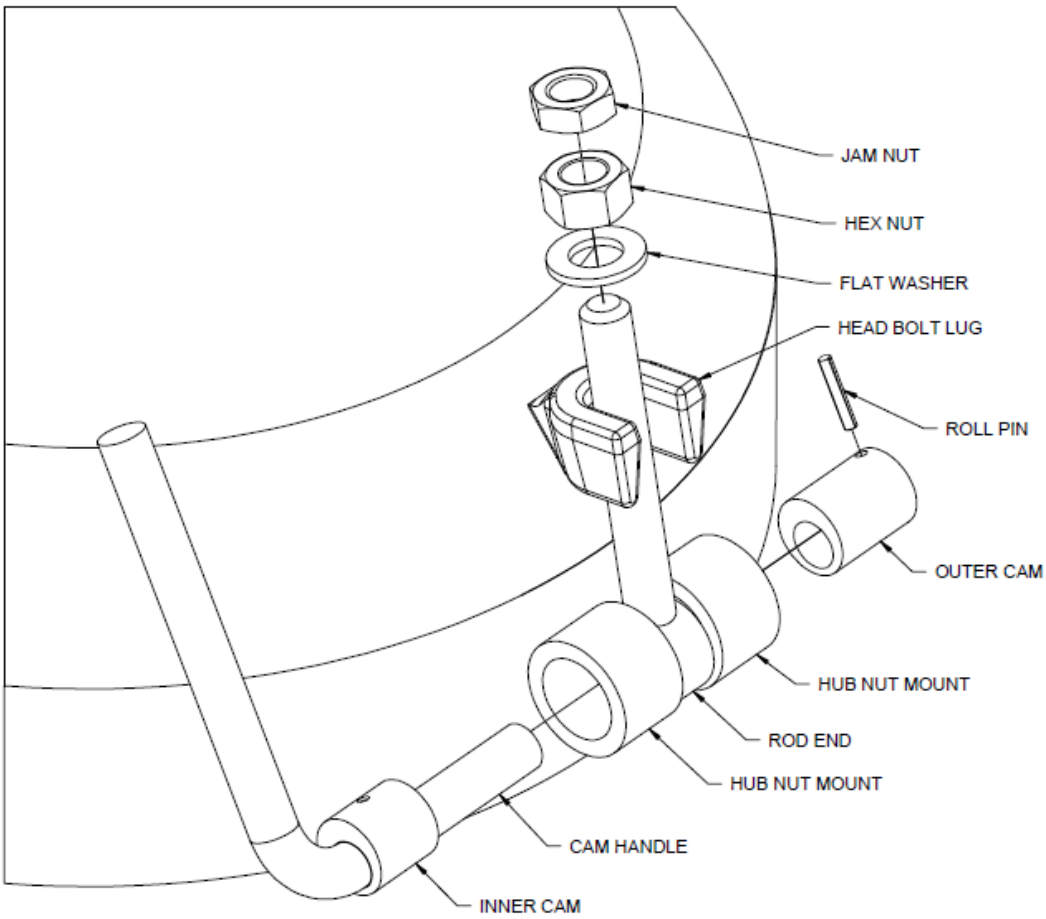

SYPRIS®
TECHNOLOGIES
Tube Turns Products

2612 Howard Street
Louisville, Ky. 40211
Telephone (502)-774-6011

1. Remove the Jam Nut, Heavy Hex Nut, and Washer from the Rod End.
2. Remove the Roll Pin from the Outer Cam. This can be done using either a Roll Pin Punch or by drilling it out.

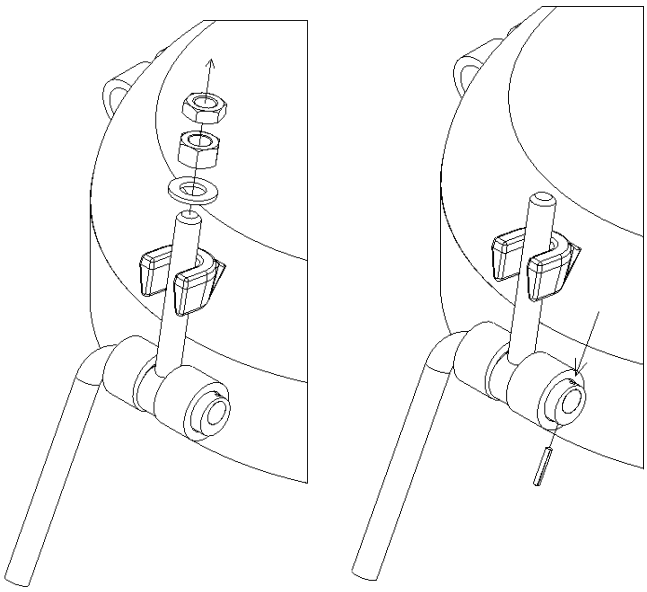

3. Remove the Outer Cam from the Cam Handle.
4. While holding onto the Rod, slide the Cam Handle out of the Hub Nut Mounts.
5. Discard the old Cam Handle, Outer Cam, and Roll Pin. The Rod End and Nuts will be reused.

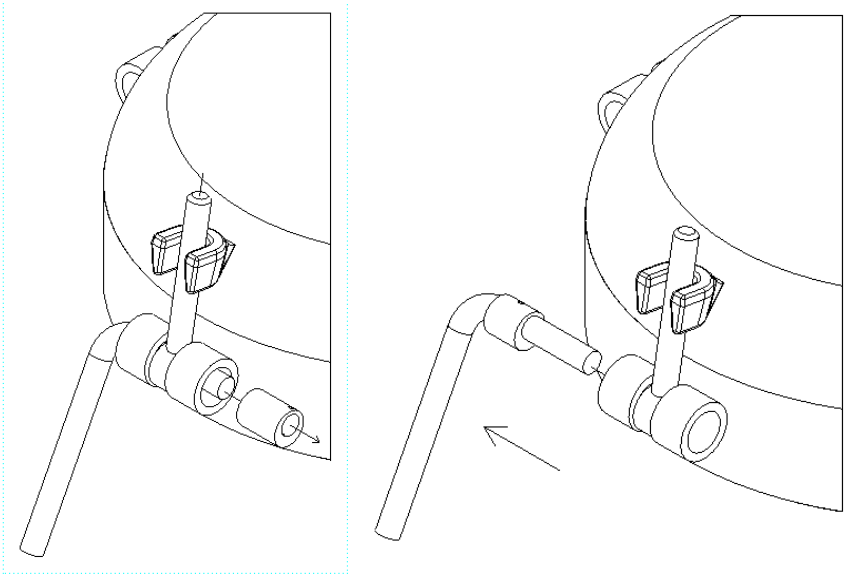

6. The Outer Cam and Roll Pin are wired to the new, replacement Cam Handle. Remove Cam and Pin from the Handle.

7. Position the Rod End between the two Hub Nut Mounts and slide the new Cam Handle into the Hub Nut Mounts and through the hole in the Rod End.

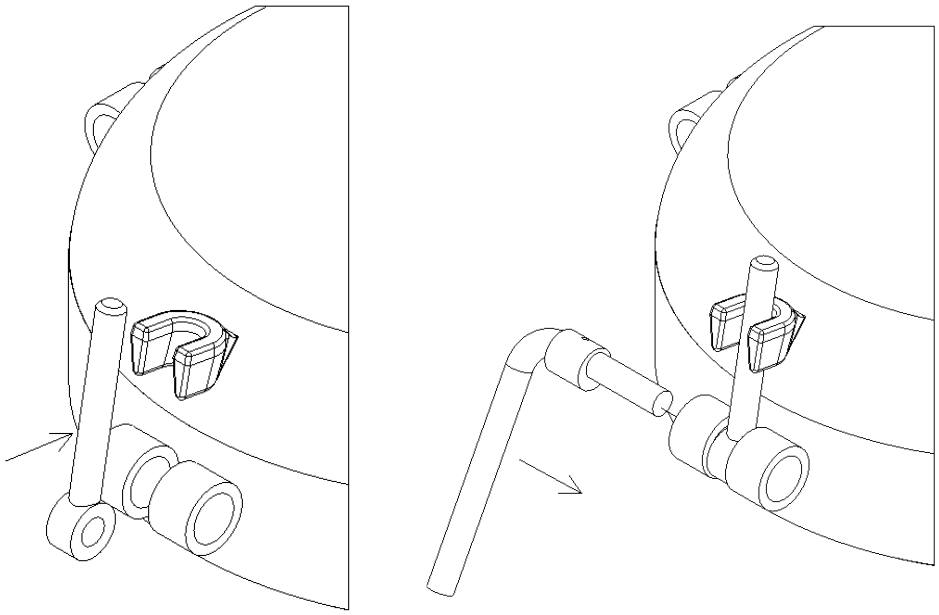

8. Slide the new Outer Cam onto the Cam Handle, aligning the holes in the Cam Handle and Outer Cam. Be sure that the Outer Cam's eccentric orientation matches that of the Inner Cam.
9. Insert the Roll Pin through the Outer Cam and into the Cam Handle. Drive the Pin in until it is flush with the surface of the Cam.

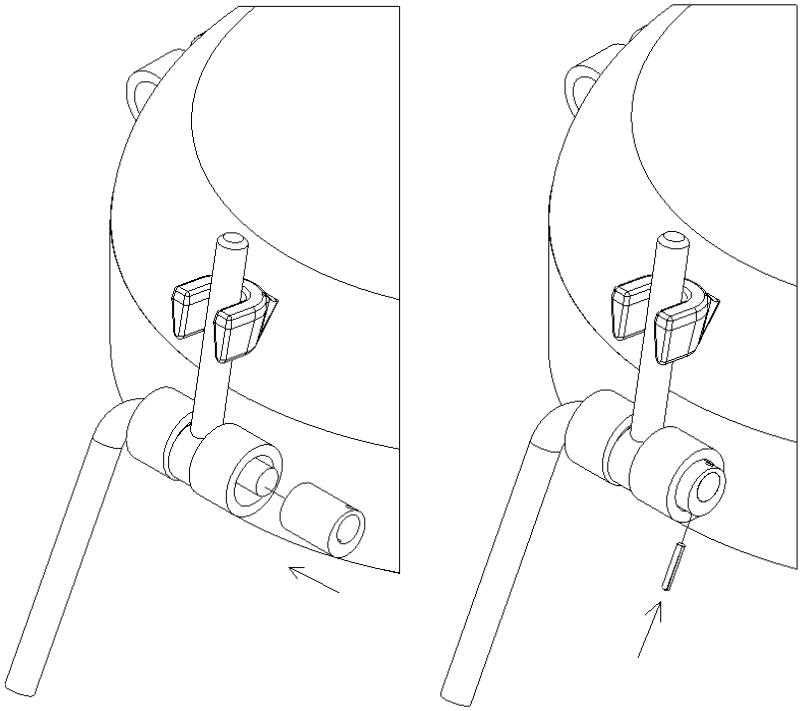

10. Rotate the Rod End so that it engages the Head Bolt Lug.
11. Rotate the Cam Handle to the closed position (up).
12. Place the Washer and Heavy Hex Nut onto the Rod and tighten the nut to the torque specified in the Installation, Operation, and Maintenance document.

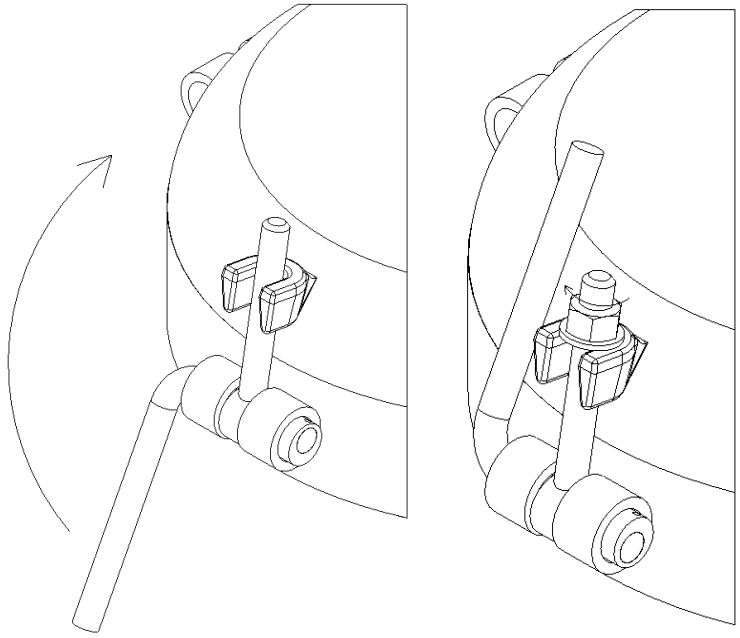

13. Place the Lock Nut on the Rod and tighten it down on the Heavy Hex Nut.

If you have questions regarding the replacement process please contact 502-774-6249.